OMRON

Switch Mode Power Supply
S8VK-N (120/240-W Models)

Cost-effective Single Phase Power Supply
Universal input and Safety standards for worldwide applications
Space-saving Compact Design



- Universal input for worldwide applications:
  100 to 240 VAC (85 to 264 VAC)
- DC input can be available: 120 to 340 VDC
- Operation temperature range: -30 to 70°C
- -40°C low-temperature start-up
- Compact Dimension for small space
- Flexible installation by special mounting brackets
- Safety standards: UL62368-1, CSA C22.2 No.62368-1, EN62368-1
  CCC: GB4943, GB9254, GB17625.1
- EMS: Conform to EN61204-3
  EMI: EN55011 Class B
- Three years Warranty

Note: Three years warranty conditions: Rated input voltage, 80% load, Ambient operating temperature: 40°C, Standard mounting

⚠ Refer to *Safety Precautions for All Power Supplies* and *Safety Precautions* on page 9.

Model Number Structure

Model Number Legend

Note: Not all combinations are possible. Refer to *List of Models* in *Ordering Information*, below.

S8VK-N □□□ **24** -□
1 2 3

1. Power Ratings
120: 120 W
240: 240 W

2. Output voltage (VDC)
24: 24 V

3. Terminal type
S: Screw terminal
P: Easy Push-in terminal block

Ordering Information

Power ratings	Input voltage	Terminal type	Output Voltage (VDC)	Output current	Model number
120 W	Single phase 100 to 240 VAC	Screw terminal	24 V	5 A	**S8VK-N12024-S**
		Easy Push-in terminal block			**S8VK-N12024-P**
240 W		Screw terminal		10 A	**S8VK-N24024-S**
		Easy Push-in terminal block			**S8VK-N24024-P**

S8VK-N

Specifications

Ratings, Characteristics, and Functions

Item		Power ratings	120 W	240 W
		Output voltage (VDC)	24 V	24 V
Efficiency (Typical)		230 VAC input	89%	92%
Input	Voltage ✻1		100 to 240 VAC (allowable range: 85 to 264 VAC,120 to 340 VDC)	
	Frequency ✻1		50/60 Hz (47 to 450 Hz)	50/60 Hz (47 to 63 Hz)
	Current (Typical)	115 VAC input	2.0 A	2.4 A
		230 VAC input	1.2 A	1.2 A
	Power factor (Typical)	230 VAC input	---	0.96
	Harmonic current emissions		Conforms to EN61000-3-2	
	Leakage current (Typical)	115 VAC input	0.5 mA max.	
		230 VAC input	1 mA max.	
	Inrush current (Typical) ✻2	115 VAC input	16 A	20 A
		230 VAC input	32 A	40 A
Output	Voltage adjustment range ✻3		-10% to 15% (with V.ADJ) (guaranteed)	
	Ripple at 20 MHz (Typical) ✻4	230 VAC input	70 mV	130 mV
	Input variation influence		0.5% max.	
	Load variation Influence (Rated Input voltage)		1.5% max.	
	Temperature variation influence		0.05%/°C max.	
	Start up time (Typical) ✻2	115 VAC input	700 ms	400 ms
		230 VAC input	600 ms	400 ms
	Hold time (Typical) ✻2	115 VAC input	10 ms	25 ms
		230 VAC input	55 ms	25 ms
Additional functions	Overload protection ✻2		105% to 160% of rated load current	
	Overvoltage protection ✻2		Yes ✻5	
	Parallel operation		No	
	Series operation		Possible for up to two Power Supplies (with external diode)	
Others	Ambient operating temperature		-30 to 70°C (Refer to Engineering Data) ✻6	
	Storage temperature		-40 to 85°C	
	Ambient operating humidity		90% RH max. (with no condensation or icing)	
	Dielectric strength (detection current: 20 mA)		3.0 kVAC for 1 min. (between all inputs and outputs) 2.0 kVAC for 1 min. (between all inputs and PE terminal) 1.0 kVAC for 1 min. (between all outputs and PE terminal)	
	Insulation resistance		100 MΩ min. (between all outputs and all inputs/ PE terminals) at 500 VDC	
	Vibration resistance		10 to 55 Hz, 0.375-mm single amplitude for 2 h each in X, Y, and Z directions	
			10 to 150 Hz, 0.35-mm single amplitude (3 G max) for 80 min. each in X, Y, and Z directions	
	Shock resistance		150 m/s^2, 3 times each in ±X, ±Y, and ±Z directions	
	Output indicatior		Yes (color: green)	
	EMI	Conducted Emission	Conforms to EN61204-3 EN55011 Class B	
		Radiated Emission	Conforms to EN61204-3 EN55011 Class B	
	EMS		Conforms to EN61204-3 high severity levels	
	Applicapable standards		UL UR: UL No. 62368-1 (Recognition) cUR: CSA C22.2 No.62368-1 CCC: GB4943, GB9254, GB17625.1	
	Compliant standards		RCM: EN 61000-6-4 UKCA EN: 62368-1	
	Degree of protection		IP20	
	SEMI		F47-0706 (200 to 240 VAC)	
	Weight		300 g	560 g

✻1. Do not use an inverter output for the Power Supply. Inverters with an output frequency of 50/60 Hz are available, but the rise in the internal temperature of the Power Supply may result in ignition or burning.
✻2. For a cold start at 25°C. Refer to *Engineering Data* on page 4 for details.
✻3. If the output voltage adjuster (V. ADJ) is turned, the voltage will increase by more than 15% of the voltage adjustment range. When adjusting the output voltage, confirm the actual output voltage from the Power Supply and be sure that the load is not damaged.
✻4. A characteristic when the ambient operating temperature is between -30 to 70°C.
✻5. To reset the protection, turn OFF the input power for three minutes or longer and then turn it back ON.
✻6. The power can start normally at 230 VAC, -40°C.

Connections

Block Diagrams

S8VK-N12024 (120 W)

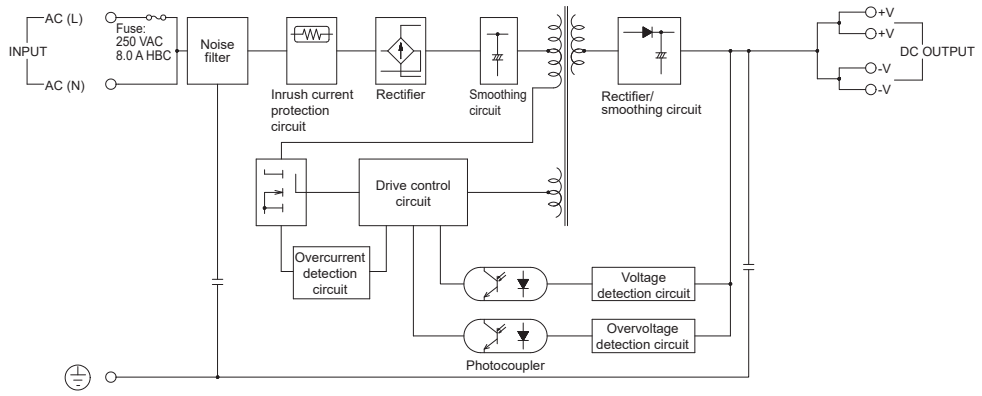

S8VK-N24024 (240 W)

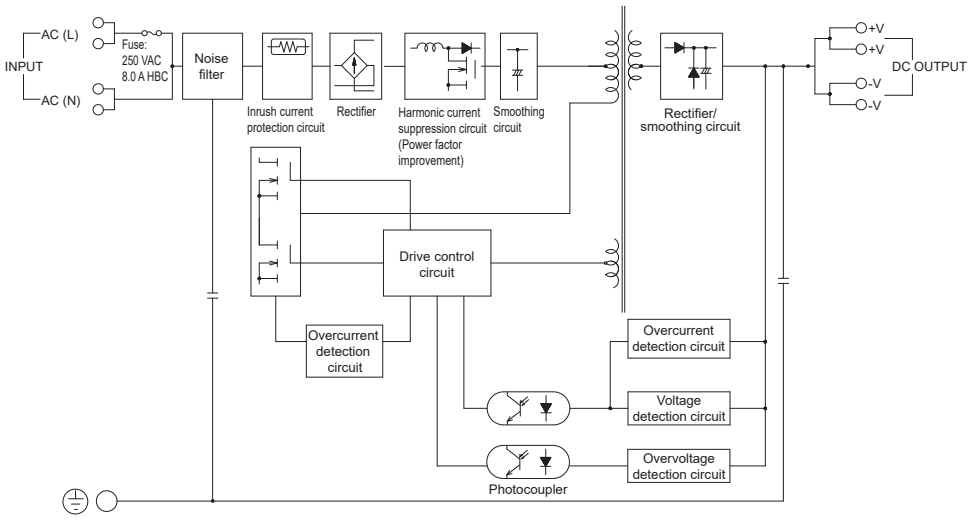

Construction and Nomenclature

Nomenclature

120 W/240 W

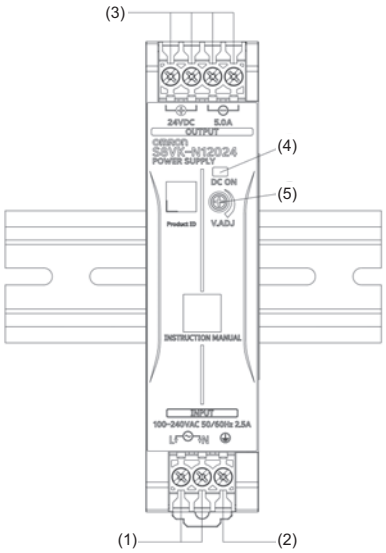

No.	Name	Function
1	Input terminals (L), (N)	Connect the input lines to these terminals. ✻1
2	Protective Earth terminal (PE)	Connect the ground line to this terminal. ✻2
3	DC Output terminals (–V), (+V)	Connect the load lines to these terminals.
4	Output indicator (DC ON: Green)	Lights while a direct current (DC) output is ON.
5	Output voltage adjuster (V.ADJ)	Use to adjust the voltage.

✻1. The fuse is located on the (L) side. It is not user-replaceable. For a DC input, connect the positive voltage to the L terminal.
✻2. This is the protective earth terminal specified in the safety standards. Always ground this terminal.

Engineering Data

Derating Curve

120, 240 W

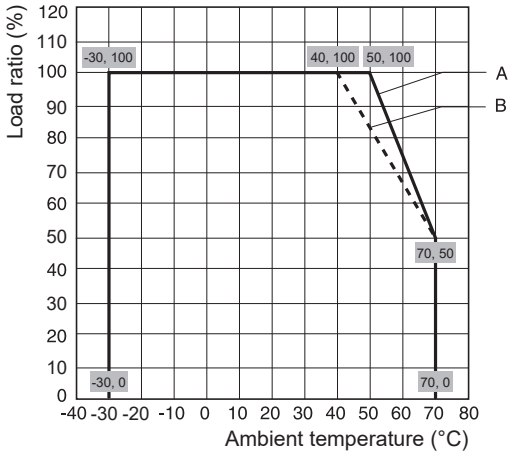

Note: 1. At less than 100 VAC, the derating is 1%/V

A. Standard mounting (230 VAC)
50°C and over: the derating is 2.5%/°C
B. Standard mounting (115 VAC)
40°C and over: the derating is 1.6%/°C

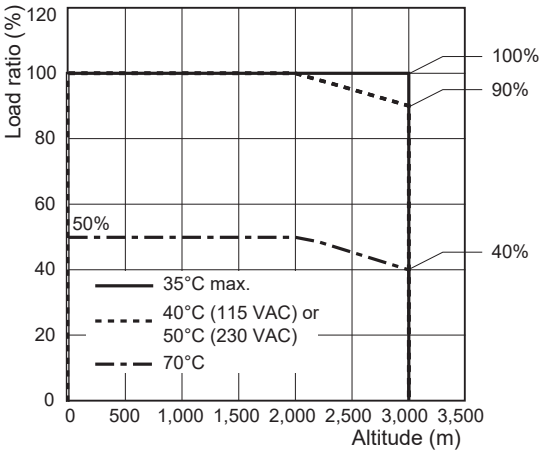

Mounting Condition
Standard mounting
Less than 100 VAC, the derating is 1%/V

Mounting

(A) Standard (Vertical) mounting

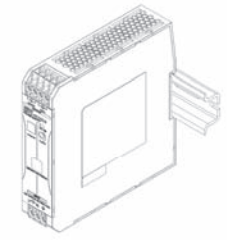

Overload Protection

The load and the power supply are automatically protected from overcurrent damage by this function.
Overload protection is activated if the output current rises above 105% of the rated current.
When the output current returns within the rated range overload protection is automatically cleared.

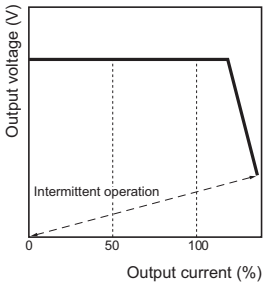

The values shown in the above diagrams are for reference only.

Note: 1. Internal parts may occasionally deteriorate or be damaged if a short-circuited or overcurrent state continues during operation.
2. Internal parts may possibly deteriorate or be damaged if the Power Supply is used for applications with frequent inrush current or overloading at the load end. Do not use the Power Supply for such applications.

Overvoltage Protection

Consider the possibility of an overvoltage and design the system so that the load will not be subjected to an excessive voltage even if the feedback circuit in the Power Supply fails. If an excessive voltage that is approximately 130% of the rated voltage or more is output, the output voltage is shut OFF. Reset the input power by turning it OFF for at least three minutes and then turning it back ON again.

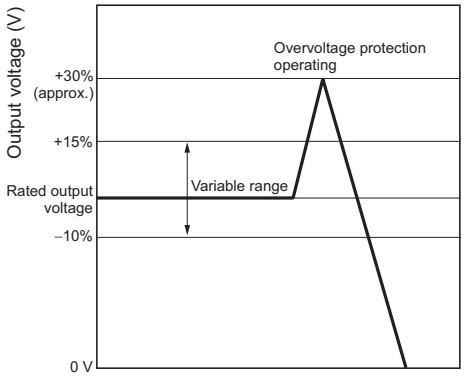

The values shown in the above diagram is for reference only.

Note: Do not turn ON the power again until the cause of the overvoltage has been removed.

Inrush Current, Startup Time, Output Hold Time

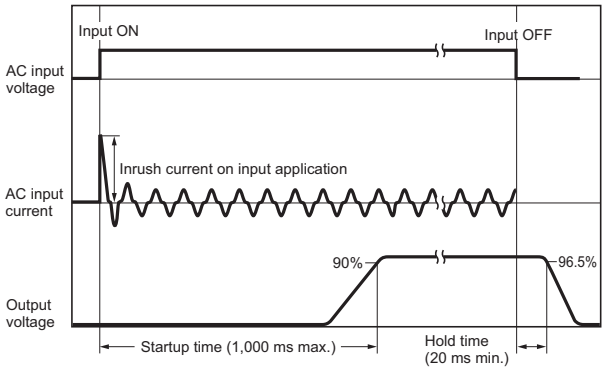

Note: Twice the input current or above will flow during the redundant system.
Therefore, check the fusing characteristics of fuses and operating characteristics of breakers making sure that the external fuses will not burn out and the circuit breakers will not be activated by the inrush current.

Two phases application for Single phase models

For All Single phase Models, S8VK-N

Basically OMRON single phase power supply can be used on two-phases of a 3–phase-system when some of conditions satisfy like below.

1. The supplying voltage is below the maximum rated input.
   OMRON Power supply allows the input voltage equivalent or less than 240 VAC+10%.
   Please confirm the input voltage between two lines if the input voltage satisfies this condition before connecting.
2. The external protector is needed on N input line to secure a safety.
   N line has no protection of a fuse internally.
   An appropriate fuse or circuit breaker should be connected on N input line like the following.

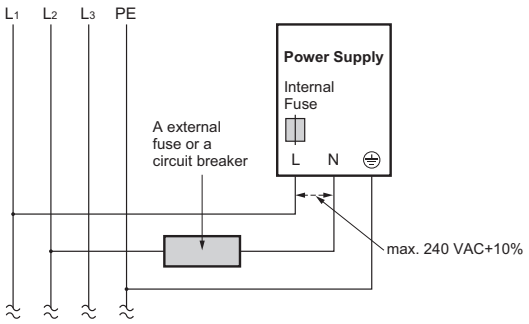

Reference Value

	Value
Reliability (MTBF)	Single phase model 120 W: 550,000 hrs 240 W: 310,000 hrs
Definition	MTBF stands for Mean Time Between Failures, which is calculated according to the probability of accidental device failures, and indicates reliability of devices. Therefore, it does not necessarily represent a life of the product.
Life expectancy	10 yrs. Min.
Definition	The life expectancy indicates average operating hours under the ambient temperature of 40°C and a load rate of 50%. Normally this is determined by the life expectancy of the built-in aluminum electrolytic capacitor.

Dimensions

(Unit: mm)

S8VK-N12024 (120 W)



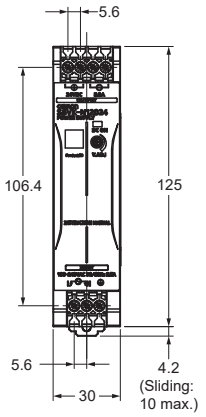

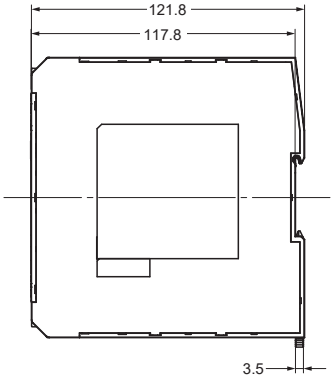

S8VK-N24024 (240 W)



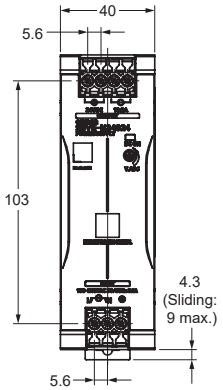

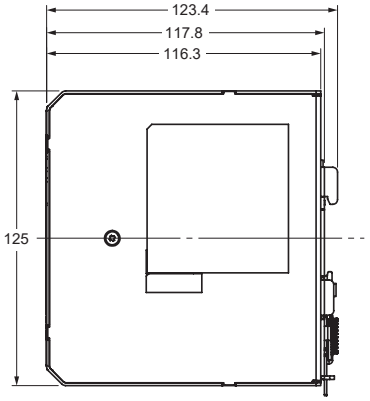

DIN Rail (Order Separately)

Note: All units are in millimeters unless otherwise indicated.

Mounting Rail (Material: Aluminum)

PFP-100N
PFP-50N

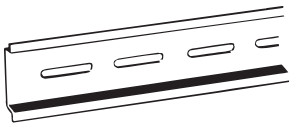

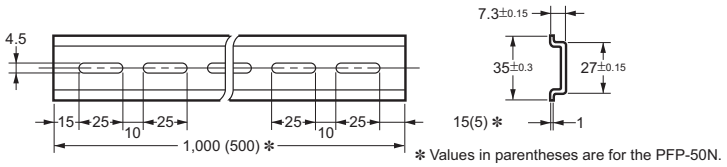

✻ Values in parentheses are for the PFP-50N.

Mounting Rail (Material: Aluminum)

PFP-100N2

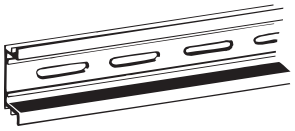

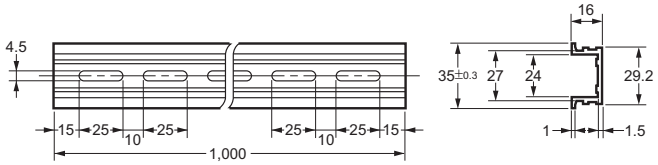

End Plate

PFP-M

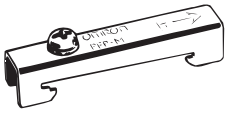

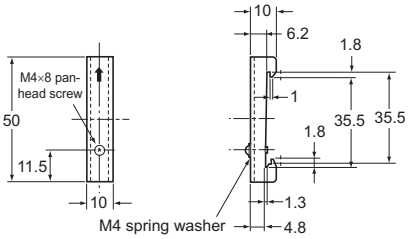

Note: If there is a possibility that the Unit will be subject to vibration or shock, use a steel DIN Rail. Otherwise, metallic filings may result from aluminum abrasion.

Safety Precautions

Warning Indications

⚠ CAUTION	**Indicates a potentially hazardous situation which, if not avoided, may result in minor or moderate injury or in property damage.**
Precautions for Safe Use	**Supplementary comments on what to do or avoid doing, to use the product safely.**
Precautions for Correct Use	**Supplementary comments on what to do or avoid doing, to prevent failure to operate, malfunction or undesirable effect on product performance.**

Meaning of Product Safety Symbols

	**Used to warn of the risk of electric shock under specific conditions.**
	**Used to warn of the risk of minor injury caused by high temperatures.**
	**Used for general mandatory action precautions for which there is no specified symbol.**
	**Use to indicate prohibition when there is a risk of minor injury from electrical shock or other source if the product is disassembled.**

⚠ CAUTION

Minor electric shock, fire, or Product failure may occasionally occur. Do not disassemble, modify, or repair the Product or touch the interior of the Product.



Minor burns may occasionally occur. Do not touch the Product while power is being supplied or immediately after power is turned OFF.



Fire may occasionally occur. Tighten terminal screws to the specified torque (0.6 N·m).



Minor injury due to electric shock may occasionally occur. Do not touch the terminals while power is being supplied. Always close the terminal cover after wiring.



Minor electric shock, fire, or Product failure may occasionally occur. Do not allow any pieces of metal or conductors or any clippings or cuttings resulting from installation work to enter the Product.



Precautions for Safe Use

Wiring

- Connect the ground completely. A protective earthing terminal stipulated in safety standards is used. Electric shock or malfunction may occur if the ground is not connected completely.
- Minor fire may possibly occur. Ensure that input and output terminals are wired correctly.
- Do not apply more than 75-N force to the terminal block when tightening it.
- Be sure to remove the sheet covering the Product for machining before power-ON so that it does not interfere with heat dissipation.
- Use the following material for the wires to be connected to the S8VK-N to prevent smoking or ignition caused by abnormal loads.

Recommended wiring

Screw terminal

Terminal	Model	Recommended wire Solid wire/stranded wire		Wires suitable for terminal blocks Solid wire/stranded wire	
		(mm^2)	(AWG)	(mm^2)	(AWG)
Input	**S8VK-N12024-S**	0.34 to 4 /0.34 to 2.5	22 to 12	0.34 to 4 /0.34 to 2.5	22 to 12
	S8VK-N24024-S	0.5 to 4 /0.5 to 2.5	20 to 12		
Output	**S8VK-N12024-S**	0.75 to 4 /0.75 to 2.5	18 to 12	0.34 to 4 /0.34 to 2.5	22 to 12
	S8VK-N24024-S	2.5 to 4 /2.5 to 4	14 to 12		
PE (protective earth)	**S8VK-N12024-S** **S8VK-N24024-S**	2.5 to 4 /2.5 to 4	14 to 12	0.34 to 4 /0.34 to 2.5	22 to 12

Easy Push-in terminal block

Terminal	Model	Recommended wire Solid wire/stranded wire		Wires suitable for terminal blocks Solid wire/stranded wire	
		(mm^2)	(AWG)	(mm^2)	(AWG)
Input	**S8VK-N12024-P**	0.34 to 2.5 /0.75 to 2.5	22 to 14 /18 to 14	0.34 to 2.5 /0.75 to 2.5	22 to 14 /18 to 14
	S8VK-N24024-P	0.5 to 2.5 /0.75 to 2.5	20 to 14 /18 to 14		
Output	**S8VK-N12024-P**	0.75 to 2.5	18 to 14	0.34 to 2.5 /0.75 to 2.5	22 to 14 /18 to 14
	S8VK-N24024-P	2.5	14		
PE (protective earth)	**S8VK-N12024-P** **S8VK-N24024-P**	2.5	14	0.34 to 2.5 /0.75 to 2.5	22 to 14 /18 to 14

Stripping specifications:

Recommended wire	Stripping length
Screw terminal	8 mm
Easy Push-in terminal block	10 mm

Recommended crimp terminals/tools

[Terminal blocks for S8VK-N12024-S, S8VK-N24024-S models]

Applicable wires		Conductor length (mm)	Recommended insert terminal		
(mm^2)	(AWG)		PHOENIX CONTACT	Weidmuller	WAGO
0.34	22	8	AI0.34-8	H0.34/12	216-302
0.5	20	8	AI0.5-8	H0.5/14	216-201
0.75	18	8	AI0.75-8	H0.75/14	216-202
1	18	8	AI1-8	H1.0/14	216-203
1.5	16	8	AI1.5-8	H1.5/14	216-204
2.5	14	8	AI2.5-8	H2.5/14	216-206
Recommended insert terminal			CRIMPFOX6 CRIMPFOX6T-F CRIMPFOX10S	PZ6 roto	Variocrimp4

Note: The processing dimensions of the plug-in terminal should follow the shapes below.

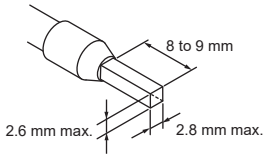

[Terminal block for models S8VK-N12024-P, S8VK-N24024-P]

Applicable wires		Conductor length (mm)	Recommended insert terminal		
(mm^2)	(AWG)		PHOENIX CONTACT	Weidmuller	WAGO
0.34	22	10	AI0.34-10	---	---
0.5	20	10	AI0.5-10	H0.5/16	216-241
0.75	18	10	AI0.75-10	H0.75/16	216-242
1	18	10	AI1-10	H1.0/16	216-243
1.5	16	10	AI1.5-10	H1.5/16	216-244
2.5	14	10	AI2.5-10	H2.5/16	216-246
Recommended insert terminal			CRIMPFOX6 CRIMPFOX6T-F CRIMPFOX10S	PZ6 roto	Variocrimp4

Note: The processing dimensions of the plug-in terminal should follow the shapes below.

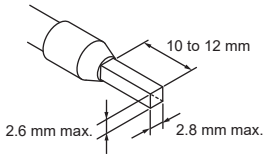

Note: The rated current for the output terminals is 10 A per terminal.
If the current exceeds the terminal's rated value, be sure to use multiple terminals at the same time.
When applying a current of 10 A or more, use at least two terminals for the positive and negative wires respectively.

Installation Environment

- Do not use the Power Supply in locations subject to shocks or vibrations. In particular, install the Power Supply as far away as possible from contactors or other devices that are a vibration source.
- Install the Power Supply well away from any sources of strong, high-frequency noise and surge.

Operating Life

- The life of a Power Supply is determined by the life of the electrolytic capacitors used inside. Here, Arrhenius Law applies, i.e., the life will be cut in half for each rise of 10°C or the life will be doubled for each drop of 10°C. The life of the Power Supply can thus be increased by reducing its internal temperature.

Ambient Operating and Storage Environments

- Store the Power Supply at a temperature of 40 to 85°C and a humidity of 95% or less.
- Do not use the Power Supply in areas outside the derating curve otherwise, internal parts may occasionally deteriorate or be damaged.
- Use the Power Supply at a humidity of 90% or less.
- Do not use the Power Supply in locations subject to direct sunlight.
- Do not use locations where liquids, foreign matter, or corrosive gases may enter the interior of Products.

Precautions for Correct Use

Mounting

- Take adequate measures to ensure proper heat dissipation to increase the long-term reliability of the Product. Be sure to allow convection in the atmosphere around devices when mounting. Do not use in locations where the ambient temperature exceeds the range of the derating curve.
- When cutting out holes for mounting, make sure that cuttings do not enter the interior of the Products.

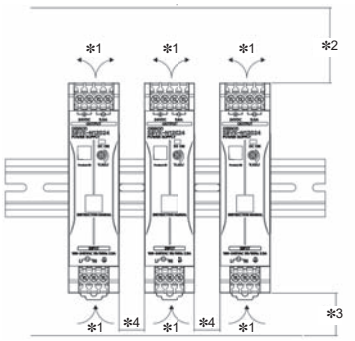

***1.** Air convection
***2.** Top clearance: at least 40 mm
***3.** Bottom clearance: at least 20 mm
***4.** Left and right clearance: at least 5 mm (not a heat source)
at least 15 mm (heat source)

- Improper mounting will interfere with heat dissipation and may occasionally result in deterioration or damage of internal parts. Use the Product within the derating curve for the mounting direction that is used.

Overcurrent Protection

- Internal parts may possibly deteriorate or be damaged if a short-circuited or overcurrent state continues during operation.
- Internal parts may possibly deteriorate or be damaged if the Power Supply is used for applications with frequent inrush current or overloading at the load end. Do not use the Power Supply for such applications.
- The DC ON indicator (green) flashes if the overload protection function operates.

Charging a Battery

If you connect a battery as the load, install overcurrent control and overvoltage protection circuits.

Output Voltage Adjuster (V.ADJ)

- The output voltage adjuster (V.ADJ) may possibly be damaged if it is turned with unnecessary force. Do not turn the adjuster with excessive force.
- After completing output voltage adjustment, be sure that the output capacity or output current does not exceed the rated output capacity or rated output current.

DIN Rail Mounting

To mount the Block on a DIN Rail, hook portion (A) of the Block onto the rail and press the Block in direction (B).

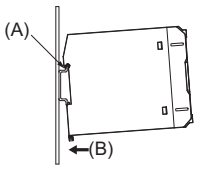

To dismount the Block, pull down portion (C) with a flat-blade screwdriver and pull out the Block.

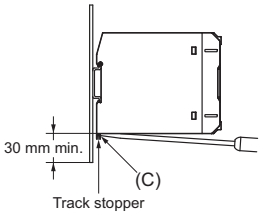

Series Operation

Two power supplies can be connected in series.

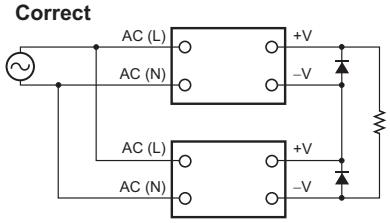

Note: 1. The diode is connected as shown in the figure. If the load is short-circuited, a reverse voltage will be generated inside the Power Supply. If this occurs the Power Supply may possibly deteriorate or be damaged. Always connect a diode as shown in the figure.
Select a diode having the following ratings.

Type	Schottky Barrier diode
Dielectric strength (V_{RRM})	Twice the rated output voltage or above
Forward current (I_F)	Twice the rated output current or above

2. Although Products having different specifications can be connected in series, the current flowing through the load must not exceed the smaller rated output current.

Making Positive/Negative Outputs

- The outputs are floating outputs (i.e., the primary circuits and secondary circuits are separated). You can therefore make positive and negative outputs by using two Power Supplies.
If positive and negative outputs are used, connect Power Supplies of the same series as in the following figure. (Combinations with different output capacities or output voltages can be made. However, use the lower of the two maximum rated output currents as the current to the loads.)

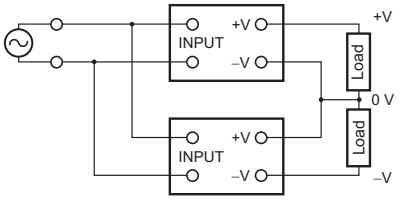

- Depending on the model, internal circuits may be damaged due to startup failure when the power is turned ON if loads such as a servomotor or operational amplifier may operate in series. Therefore, connect bypass diodes (D1, D2) as shown in the following figure.
  If the list of models that support series connection of outputs says that an external diode is not required, an external diode is also not required for positive/negative outputs.

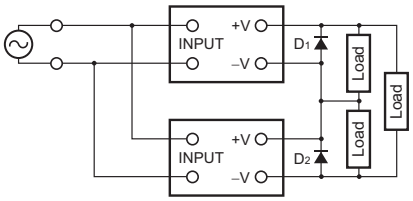

- Use the following information as a guide to the diode type, dialectic strength, and current.

- Type: Schottky barrier diode
- Dielectric strength (V_{RRM}): Twice the rated Power Supply output voltage or higher
- Forward current (I_F): Twice the rated Power Supply output current or higher

Backup Operation

Backup operation can be performed with S8VK-R.
Refer to the S8VK-R Datasheet for detail.

In Case There Is No Output Voltage

The possible cause for no output voltage may be that the overcurrent or overvoltage protection has operated. The internal protection may operate if a large amount of surge voltage such as a lightening surge occurs while turning ON the power supply.
In case there is no output voltage, please check the following points before contacting us:

- Checking overload protected status:
  Check whether the load is in overload status or is short-circuited. Remove wires to load when checking.
- Checking overvoltage or internal protection:
  Turn the power supply OFF once, and leave it OFF for at least 3 minutes. Then turn it ON again to see if this clears the condition.

Audible Noise at Power ON

(240-W Models)

A harmonic current suppression circuit is built into the Power Supply. This circuit can create noise when the input is turned ON, but it will last only until the internal circuits stabilize and does not indicate any problem in the Product.

Period and Terms of Warranty

Warranty Period

The product warranty is valid for a period of three years from the date of shipment from the factory.

Terms of Warranty

The warranty is valid only for the following operating conditions.
1. Average ambient operating temperature of the product: 40°C max.
2. Average load rate: 80% max.
3. Mounting method: Standard mounting
✻ The maximum ratings must be within the derating curve.

If the product fails for reasons attributable to OMRON within the above warranty period, OMRON will repair or replace the faulty part of the product at the place of purchase or the place where the product delivered without charge.
This warranty does not cover the following types of failures.

(1) Failures that result from handling or operation of the product under conditions or in environments that are not given in this document and not given in any other specifications exchanged between OMRON and the customer
(2) Failures that originate in causes other than the delivered product itself
(3) Failures caused by disassembly, modification, or repair of the product by anyone other than OMRON
(4) Failures caused by applications or uses for which the product was not originally intended
(5) Failures caused by factors that could not be anticipated with the scientific or technical knowledge available when the product was shipped
(6) Failures caused by other causes for which OMRON is not responsible, such as natural disasters and other acts of God
This warranty is limited to the individual product that was delivered and does not cover any secondary, subsequent, or related damages.

Recommended Replacement Periods and Periodic Replacement for Preventive Maintenance

The recommended replacement period for preventive maintenance is greatly influenced by the application environment of the product. As a guideline, the recommended replacement period is 7 to 10 years.*
To prevent failures or accidents that can be caused by using a product beyond its service live, we recommend that you replace the product as early as possible within the recommended replacement period.
However, bear in mind that the recommended replacement period is for reference only and does not guarantee the life of the product.

Many electronic components are used in the product and the product depends on the correct operation of these components to achieve the original product functions and performance.
However, the influence of the ambient temperature on aluminum electrolytic capacitors is large, and the service life is reduced by half for each 10°C rise in temperature (Arrhenius law).
When the capacity reduction life of the electrolytic capacitor is reached, the product failures or accidents may occur.
We therefore recommend that you replace the product periodically to minimize product failures or accidents in advance.
✻ The recommended replacement period applies under the following conditions: rated input voltage, load rate of 50% max., ambient temperature of 40°C max., and the standard mounting method. (The fan is excluded for models with fans.)

This product model is designed with a service life of 10 years minimum under the above conditions.

Terms and Conditions Agreement

Read and understand this catalog.

Please read and understand this catalog before purchasing the products. Please consult your OMRON representative if you have any questions or comments.

Warranties.

(a) Exclusive Warranty. Omron's exclusive warranty is that the Products will be free from defects in materials and workmanship for a period of twelve months from the date of sale by Omron (or such other period expressed in writing by Omron). Omron disclaims all other warranties, express or implied.

(b) Limitations. OMRON MAKES NO WARRANTY OR REPRESENTATION, EXPRESS OR IMPLIED, ABOUT NON-INFRINGEMENT, MERCHANTABILITY OR FITNESS FOR A PARTICULAR PURPOSE OF THE PRODUCTS. BUYER ACKNOWLEDGES THAT IT ALONE HAS DETERMINED THAT THE PRODUCTS WILL SUITABLY MEET THE REQUIREMENTS OF THEIR INTENDED USE.

Omron further disclaims all warranties and responsibility of any type for claims or expenses based on infringement by the Products or otherwise of any intellectual property right. (c) Buyer Remedy. Omron's sole obligation hereunder shall be, at Omron's election, to (i) replace (in the form originally shipped with Buyer responsible for labor charges for removal or replacement thereof) the non-complying Product, (ii) repair the non-complying Product, or (iii) repay or credit Buyer an amount equal to the purchase price of the non-complying Product; provided that in no event shall Omron be responsible for warranty, repair, indemnity or any other claims or expenses regarding the Products unless Omron's analysis confirms that the Products were properly handled, stored, installed and maintained and not subject to contamination, abuse, misuse or inappropriate modification. Return of any Products by Buyer must be approved in writing by Omron before shipment. Omron Companies shall not be liable for the suitability or unsuitability or the results from the use of Products in combination with any electrical or electronic components, circuits, system assemblies or any other materials or substances or environments. Any advice, recommendations or information given orally or in writing, are not to be construed as an amendment or addition to the above warranty.

See http://www.omron.com/global/ or contact your Omron representative for published information.

Limitation on Liability; Etc.

OMRON COMPANIES SHALL NOT BE LIABLE FOR SPECIAL, INDIRECT, INCIDENTAL, OR CONSEQUENTIAL DAMAGES, LOSS OF PROFITS OR PRODUCTION OR COMMERCIAL LOSS IN ANY WAY CONNECTED WITH THE PRODUCTS, WHETHER SUCH CLAIM IS BASED IN CONTRACT, WARRANTY, NEGLIGENCE OR STRICT LIABILITY.

Further, in no event shall liability of Omron Companies exceed the individual price of the Product on which liability is asserted.

Suitability of Use.

Omron Companies shall not be responsible for conformity with any standards, codes or regulations which apply to the combination of the Product in the Buyer's application or use of the Product. At Buyer's request, Omron will provide applicable third party certification documents identifying ratings and limitations of use which apply to the Product. This information by itself is not sufficient for a complete determination of the suitability of the Product in combination with the end product, machine, system, or other application or use. Buyer shall be solely responsible for determining appropriateness of the particular Product with respect to Buyer's application, product or system. Buyer shall take application responsibility in all cases.

NEVER USE THE PRODUCT FOR AN APPLICATION INVOLVING SERIOUS RISK TO LIFE OR PROPERTY OR IN LARGE QUANTITIES WITHOUT ENSURING THAT THE SYSTEM AS A WHOLE HAS BEEN DESIGNED TO ADDRESS THE RISKS, AND THAT THE OMRON PRODUCT(S) IS PROPERLY RATED AND INSTALLED FOR THE INTENDED USE WITHIN THE OVERALL EQUIPMENT OR SYSTEM.

Programmable Products.

Omron Companies shall not be responsible for the user's programming of a programmable Product, or any consequence thereof.

Performance Data.

Data presented in Omron Company websites, catalogs and other materials is provided as a guide for the user in determining suitability and does not constitute a warranty. It may represent the result of Omron's test conditions, and the user must correlate it to actual application requirements. Actual performance is subject to the Omron's Warranty and Limitations of Liability.

Change in Specifications.

Product specifications and accessories may be changed at any time based on improvements and other reasons. It is our practice to change part numbers when published ratings or features are changed, or when significant construction changes are made. However, some specifications of the Product may be changed without any notice. When in doubt, special part numbers may be assigned to fix or establish key specifications for your application. Please consult with your Omron's representative at any time to confirm actual specifications of purchased Product.

Errors and Omissions.

Information presented by Omron Companies has been checked and is believed to be accurate; however, no responsibility is assumed for clerical, typographical or proofreading errors or omissions.

Note: Do not use this document to operate the Unit.

OMRON Corporation **Industrial Automation Company**

Kyoto, JAPAN **Contact : www.ia.omron.com**

Regional Headquarters

OMRON EUROPE B.V.
Wegalaan 67-69, 2132 JD Hoofddorp
The Netherlands
Tel: (31) 2356-81-300 Fax: (31) 2356-81-388

OMRON ELECTRONICS LLC
2895 Greenspoint Parkway, Suite 200
Hoffman Estates, IL 60169 U.S.A.
Tel: (1) 847-843-7900 Fax: (1) 847-843-7787

OMRON ASIA PACIFIC PTE. LTD.
438B Alexandra Road, #08-01/02 Alexandra
Technopark, Singapore 119968
Tel: (65) 6835-3011 Fax: (65) 6835-3011

OMRON (CHINA) CO., LTD.
Room 2211, Bank of China Tower,
200 Yin Cheng Zhong Road,
PuDong New Area, Shanghai, 200120, China
Tel: (86) 21-6023-0333 Fax: (86) 21-5037-2388

Authorized Distributor:

©OMRON Corporation 2026 All Rights Reserved.
In the interest of product improvement,
specifications are subject to change without notice.

CSM_1_1
Cat. No. T241-E1-01 0726 (0726)