Switching power supply
S8VK-N

Compact by Design.
Simple to Use.
Uncompromised Reliability.



The Next Generation of Power Performance Omron launches the new S8VK-N DIN-rail power supply

Built on the proven stability and reliability of the previous power supply series, the S8VK-N has been further enhanced to deliver even greater performance and flexibility. Whether used in industrial automation, new energy applications, or other demanding environments, it provides an efficient and dependable power supply solution that meets the evolving needs of users.



Slim, compact DIN-rail mounted power supply
Compact design, space-saving ---------- P3

Suitable for a variety of harsh environment
Excellent environmental resistance ---------- P4

Flexible and convenient installation methods
Multiple wiring methods, easy installation ---------- P5

Slim, compact DIN-rail power supply

Features a narrow-body design for more efficient use of cabinet space.

Engineered with a compact form factor to significantly reduce installation space compared to traditional power supplies.

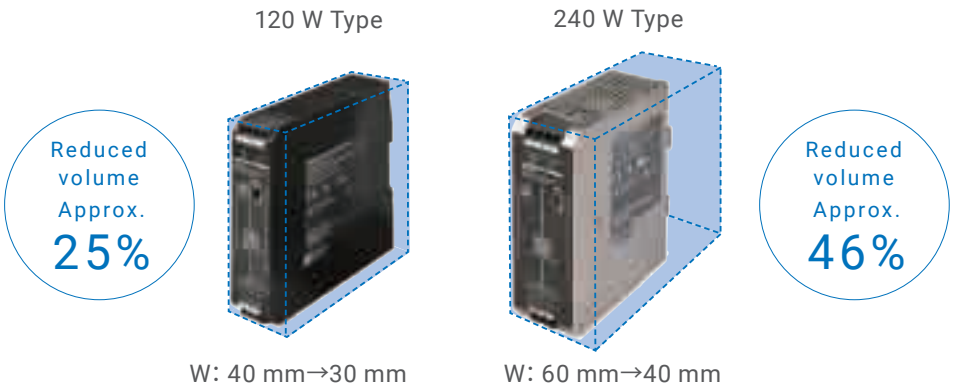

Save valuable cabinet space for users while also improving the flexibility and aesthetics of the overall layout.

Previously

Our company's previous products
240 W

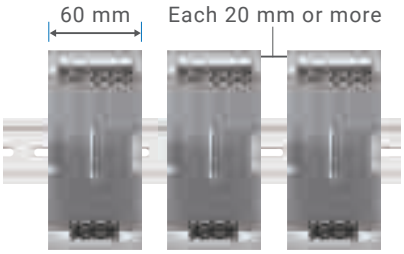

From now on

S8VK-N
240 W

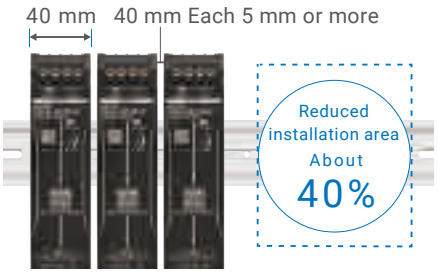

The unified design improves thermal performance by reducing heat accumulation, helping to prevent overheating within the control cabinet.



Designed to perform in harsh environments

Stable operation in extreme environments - heat, cold, and high altitudes.

Ensures reliable performance even in the toughest environments, with stable operation across a wide temperature range and strong resistance to interference.



Can be used at full load at 50°C in high-temperature conditions, and can operate at up to 70°C with stable performance

It can still perform excellently even in high-altitude areas of 3000m

Can work normally at low temperatures of -30°C, and can start at -40°C in low-temperature conditions

Drawing on the previous generation, it offers greatly improved adaptability to extreme temperatures and increased load-handling capability.

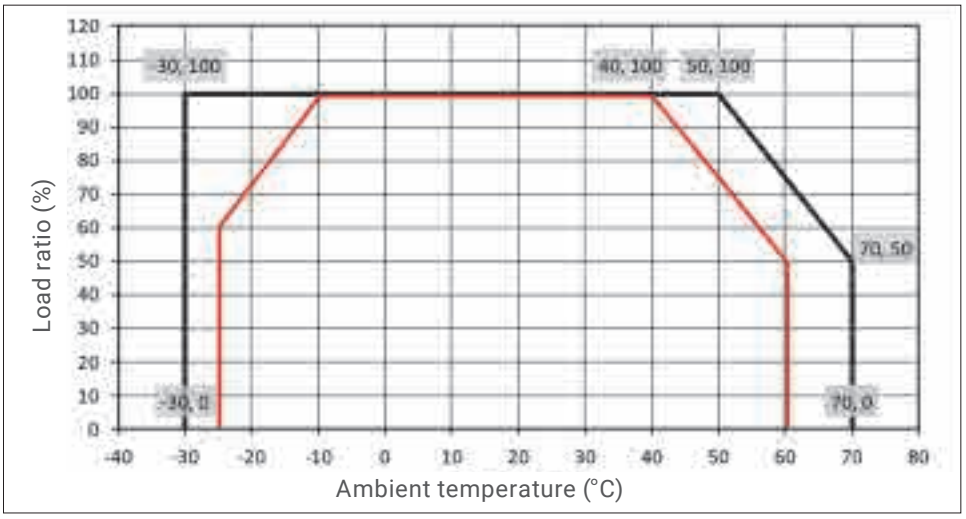

*The above figure shows the test data under 230VAC applied conditions.

Flexible and convenient installation options

Compatible with various wiring types, enabling easy one-handed installation to save time and effort.

A versatile selection of wiring options, combined with Easy-Push terminals, simplifies installation and enables fast, efficient deployment - even in complex on-site environments.



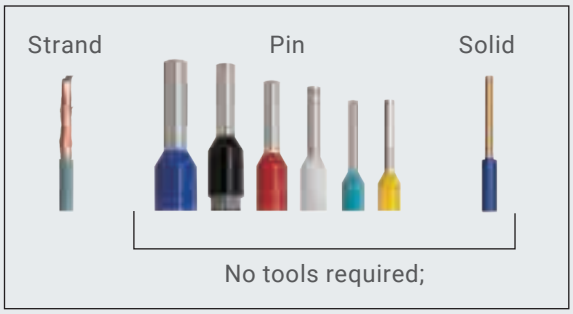

Wiring can be connected, or the built-in slot can be released with one hand, making assembly easy. Easy wiring supports stranded wire, solid wire, and ferrule terminals.

Easy-Push terminals allow simple one-step wiring, cutting installation time significantly.

Approxi mately*1 60%



① Remove the screw
② Connect the terminal
③ Tighten the screw
④ Put the check mark
⑤ Further tighten the

Screw terminals

Wiring screw terminals requires considerable effort.

*1. The Easy-Push terminal block and screw terminal block are both based on our company's measured data



① Insert the terminal

Easy-Push Terminals

Easy-Push terminals block completes by a single step
When properly installed, the "click" gives a reassuring feeling

Product lineup

S8VK-N

Universal input available worldwide:
100~240 VAC (85~264 VAC)
- DC input available: 120 to 340 VDC
- Operating temperature range: -30 to 70˚C
- Compact and refined dimensions, suitable for smaller spaces
- Flexible installation with a variety of terminal options
- Safety standards:
  UL62368-1, CSA C22.2 No. 62368-1, EN 62368-1
  CCC: GB4943, GB9254, GB17625.1
- EMS: Complies with EN61204-3
  EMI: EN55011 Class B
- Three-year warranty

Note: Some models covered by the CCC standard are excluded.



Order Information

Type	Rated Power	Input Voltage	Output Voltage	Output Current	Dimensions (W×H×D) [mm]	Order model
Single-phase power supply	120 W	100-240 VAC	24 V	5 A	30×125×118	S8VK-N12024-S
						S8VK-N12024-P
			48 V	2.5 A		S8VK-N12048-S
						S8VK-N12048-P
	240 W		24 V	10 A	40×125×118	S8VK-N24024-S
						S8VK-N24024-P

S8VK-N Parts Names

120 W/240 W Model

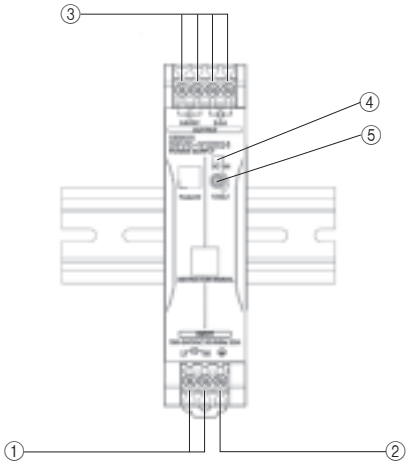

No.	Name	Function
1	Input terminals (L), (N)	Connect the input wires to the terminals.*1
2	Protective earth terminal (PE)	Connect the grounding wire to this terminal.*2
3	DC output terminals (-V), (+V)	Connect the load wire to the terminal.
4	Output indicator lamp (DC ON: green)	Lights when the DC output is ON.
5	Output voltage adjuster (V.ADJ)	Used to adjust the voltage.

*1. The fuse is located on the (L) side. Users must not replace it. If DC input is required, connect the positive voltage to the L terminal.
*2. Protective grounding terminal specified by safety standards. Be sure to ground this terminal.

S8VK-N Outline Dimensions (Unit: mm)

S8VK-N12024 (120 W)
S8VK-N12048 (120 W)

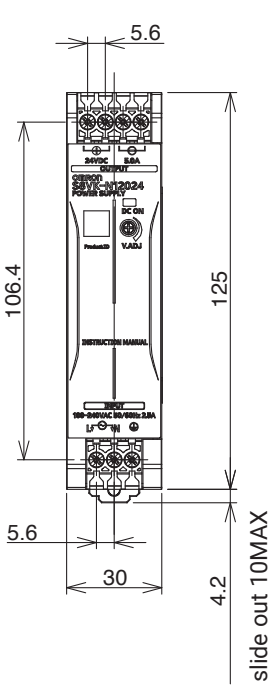

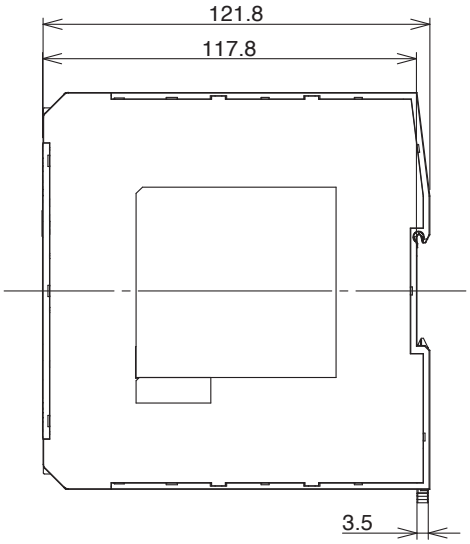

S8VK-N24024 (240 W)

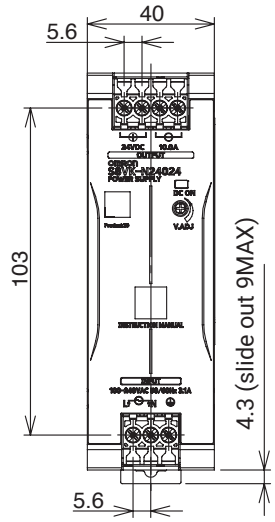

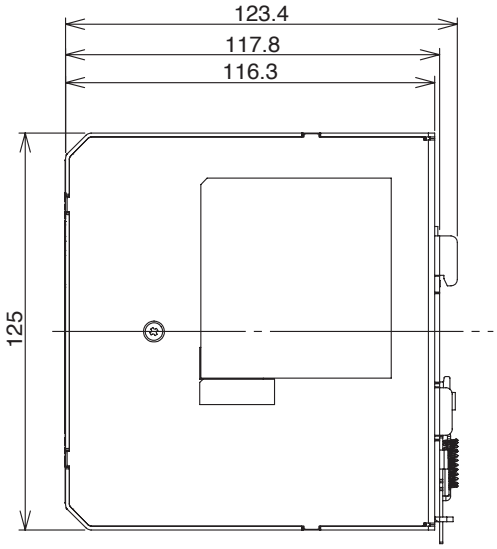

Note: Do not use this document to operate the Unit.

OMRON Corporation **Industrial Automation Company**

Kyoto, JAPAN **Contact : www.ia.omron.com**

Regional Headquarters

OMRON EUROPE B.V.
Wegalaan 67-69, 2132 JD Hoofddorp
The Netherlands
Tel: (31) 2356-81-300 Fax: (31) 2356-81-388

OMRON ELECTRONICS LLC
2895 Greenspoint Parkway, Suite 200
Hoffman Estates, IL 60169 U.S.A.
Tel: (1) 847-843-7900 Fax: (1) 847-843-7787

OMRON ASIA PACIFIC PTE. LTD.
438B Alexandra Road, #08-01/02 Alexandra
Technopark, Singapore 119968
Tel: (65) 6835-3011 Fax: (65) 6835-3011

OMRON (CHINA) CO., LTD.
Room 2211, Bank of China Tower,
200 Yin Cheng Zhong Road,
PuDong New Area, Shanghai, 200120, China
Tel: (86) 21-6023-0333 Fax: (86) 21-5037-2388

Authorized Distributor:

©OMRON Corporation 2023 All Rights Reserved.
In the interest of product improvement,
specifications are subject to change without notice.

CSM_1_1

Cat. No. T239-E1-01 0726 (0726)